MOTOROLA

Professional Radio

GP360

User Guide

68P64110B26A

Issue: June 2000

Downloaded from www.rads.ru

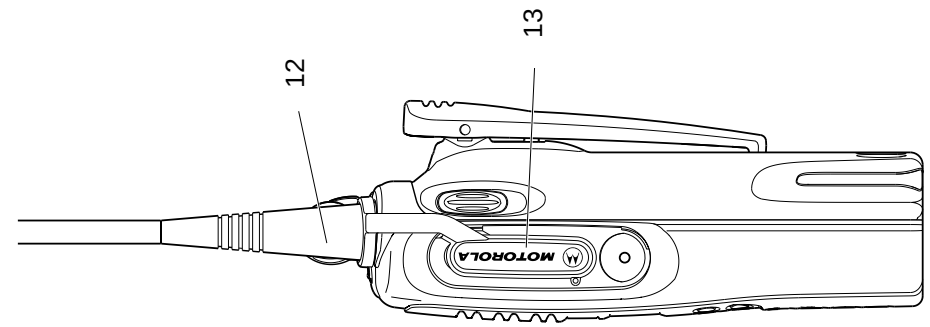
12
13
MOTOROLA

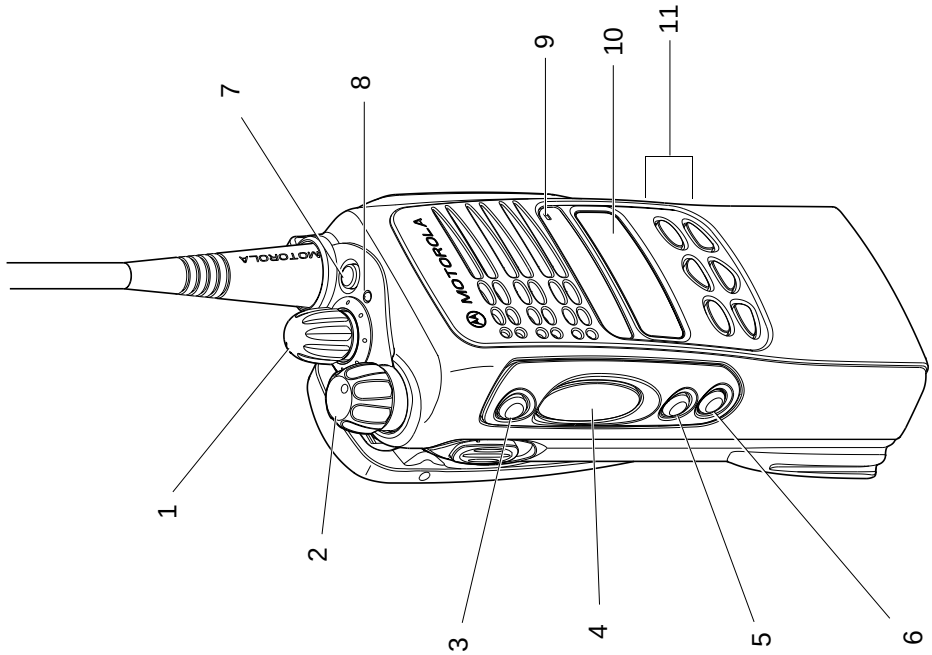
1
2
3
4
5
6
7
8
9
10
11
MOTOROLA
MOTOROLA

CONTENTS

Radio Overview 3

Operation and Control Functions 3
Radio Controls 3
Programmable Buttons 3
Menu Keys 7
Menu Navigation Chart 8
Keypad Lock/Unlock 9
LCD Display and Icons 10
Audio Signal Tones 11

Getting Started 13

Battery Information 13
Battery Care and Tips 13
Recycling or Disposal of Batteries . . . 14
Charging the Battery 14

Accessory Information 15

Attaching the Battery 15
Removing the Battery 15
Attaching the Antenna 16
Removing the Antenna 16
Attaching the Belt Clip 17
Removing the Belt Clip 17

Radio Operation 18

Turning the Radio On-Off 18
Radio On Message 18
Adjusting the Radio's Volume 18
Selecting a Radio Channel 19
Sending a Call 20
Receiving a Call 20
Cancelling a Call 20
Ending a Call 20

Radio Calls 21

Selective Calls 21
Making a Selective Call 21
Receiving a Selective Call 21
Contact List 22
Missed Calls 24
Status Calls 27
Making a Status Call 27
Receiving a Status Call 29
Emergency Calls 30

CONTENTS

Features 31

Voice Storage. 31
Voice Recorder 31
Emergency Message 34

Utilities 35

Scan. 36
Call Forward. 39
Talkaround 40
Whisper 41
Lone Worker. 42
Power Level 43
Companding. 44
Backlight. 45
Option Board 46
Voice Operated Transmit (VOX) 47
Stun/Unstun 48

Radio Information 49

Safety Information 51

Safe and Efficient Operation 51
Exposure to Radio Frequency Energy. . . .51
Radio Operation and EME Exposure 52
Electromagnetic Interference/
Compatibility 52
Operational Warnings 52
Vehicles with an Air Bag. 52
Potentially Explosive Atmospheres . . .52
Batteries 52
Blasting Caps and Areas 53
Operational Cautions. 53
Damaged Antennas 53
Batteries 53
General Radio Care. 53

Computer Software Copyright

The products described in this manual may include copyrighted computer programmes stored in semiconductor memories or other media. Laws in the United States of America and other countries preserve for Motorola Europe and Motorola Inc. certain exclusive rights for copyrighted computer programmes, including the right to copy or reproduce in any form the copyrighted computer programme. Accordingly, any copyrighted computer programmes contained in the products described in this manual may not be copied or reproduced in any manner without the express written permission of the holders of the rights. Furthermore, the purchase of these products shall not be deemed to grant either directly or by implication, estoppel, or otherwise, any licence under the copyrights, patents, or patent applications of the holders of the rights, except for the normal non-exclusive royalty free licence to use that arises by operation of the law in the sale of the product.

RADIO OVERVIEW

This user guide covers the operation of the GP360 Portable Radio.

Please read pages 51 to 53 **before** using this radio

OPERATION AND CONTROL FUNCTIONS

Radio Controls

The numbers below refer to the illustrations on the inside front cover.

1. **Rotary Knob**
   Used as a channel selector and for multi-function scrolling.
2. **On-Off / Volume Knob**
   Used to turn the radio on or off, and to adjust the radio's volume.
3. **Side Button 1 (Programmable)**
   Recommended for Monitor/ Call Cancel Button.
4. **Push to Talk Button (PTT)**
   Press and hold down this button to talk, release it to listen.
5. **Side Button 2 (Programmable)**
6. **Side Button 3 (Programmable)**
7. **Top Button** (programmable)
   Recommended as Emergency button.
8. **LED Indicator**
   Green: *Successful power up.*
   Green Flashing: *Radio scanning.*
   Red: *Radio transmitting.*
   Red Flashing: *Channel busy - when receiving.*
   Yellow: *Radio called.*
   Yellow Flashing: *Radio call reminder alert.*
   Red Flashing: *Low battery warning - when transmitting.*
9. **Microphone**
10. **LCD Display** (1 Line)
11. **Menu Keys**
12. **Antenna**
13. **Accessory Connector**
    Connects headsets, remote speaker/microphones and other accessories. Replace attached dust cap when not in use.

Programmable Buttons

Several of your radio buttons can be programmed (by Customer Programming Software CPS) to activate the radio features.

The following table shows the features that can be assigned to the Top button and Side Buttons 1, 2 and 3.

Feature	Description
Monitor/Cancel	Monitor allows user to select between signalling squelch, carrier squelch and unsquelch, and to suspend scan when landed on a channel in scan mode. Cancel allows user to cancel current incoming or outgoing call.
Radio Call	To make an individual or group selective call.
Missed Calls List	Allows user direct access into Missed Calls List menu feature.
Contact List	Allows user direct access into Contact List menu feature.
Status List	Allows user direct access into Status List menu feature.
Channel	Allows user direct access into the Channel mode. The rotary knob (1) is set to increment/decrement the channel number.
Scan On/Off	To toggle between start and stop of the scan operation.

Feature	Description
Nuisance Delete/ Cancel (Voice Storage)	To delete a nuisance (unwanted) channel when scanning, with exception of priority channel, last channel in scan list and home channel. Cancel, deletes messages being played back from the Voice Storage feature.
Nuisance Delete	To delete a nuisance (unwanted) channel when scanning, with exception of priority channel, last channel in scan list and home channel.
Cancel (Voice Storage)	Cancel, deletes messages being played back from the Voice Storage feature.
Power Level	To toggle the radio's transmit power level between High and Low.
Talkaround On/Off	To talk directly with another radio without going through a system or despatcher.
Emergency	Activates emergency alarm sequence. A pre-recorded message (using the voice storage feature) may be sent to enable the user's location or status to be determined.

Feature	Description
Lone Worker	To identify user as a lone worker. Radio enters emergency sequence unless user responds, when prompted, by pressing any radio button.
Call Forward	To transfer calls automatically to another radio if user is unable to take the call.
Whisper	To increase the gain of the radio microphone to allow user to speak quietly.
Companding On/ Off	To toggle between compression/expansion of audio signal and normal audio signal.
Option Board On/Off	Allows user to toggle the option board between on and off.
Keypad Lock On/Off	Allows user to lock/unlock menu keys.
Backlight	To toggle the display/keypad backlight on and off.
Record/Play-back (Voice Recorder)	To record/play-back incoming calls, emergency message or memo using voice recorder feature.

Menu Keys

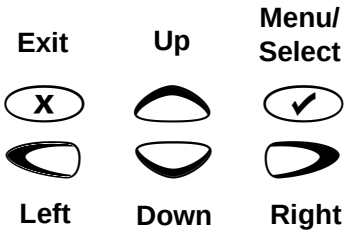

Menu/Select Key ✔
Used to enter the Menu Mode. When you are in the Menu Mode, this key is also used to make menu selections.

Note: When the radio is in the IDLE STATE, pressing any of the six menu keys causes the radio to enter the Menu mode.

Exit Key x
Used to move up to the next higher Menu level. When the top level menu is selected, this key is used to exit the Menu Mode.

Up Key
Used for scrolling when in Menu Mode.

Down Key
Used for scrolling when in Menu Mode.

Right Key
Used as More key to provide additional information.

Left Key
Used as a destructive backspace key when editing.

Menu Navigation Chart

(Refer to Menu Navigation guidelines—lower, left-hand corner of this page)

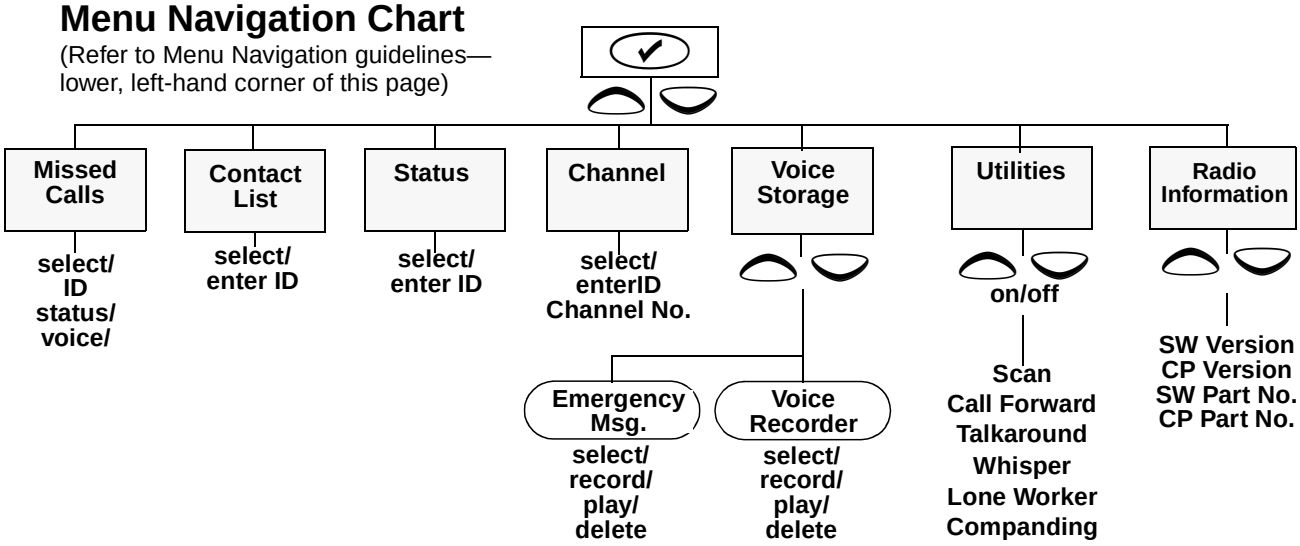

Menu Navigation

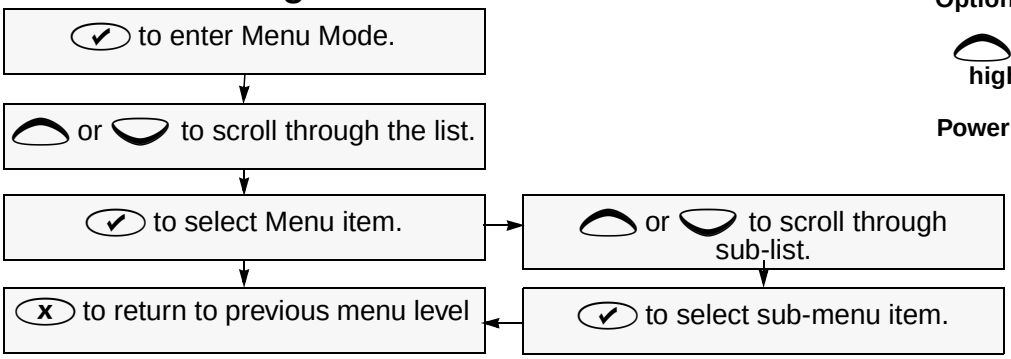

Downloaded from www.rads.ru

Keypad Lock/Unlock

On your radio there is a keypad lock feature which allows you to lock the menu keys to eliminate accidental key presses.

Press the keypad lock button to lock the keys, the display icon will be lit and the display will show:

Lock Keypad

After 2 seconds the radio returns to the IDLE state.

Press the keypad lock button again to unlock the keys when the icon will be extinguished and the display will show:

Unlock Keypad

The radio will then return to the IDLE state.

Keypad Unlock may be performed during a call, to allow menu access to the contact list, status list and scan on/off features.

LCD Display and Icons

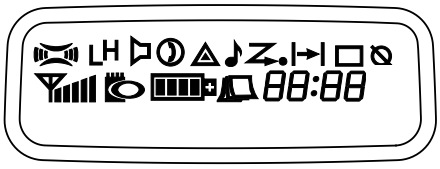

Displays channel, menu, and radio status information. The top two screen rows show radio status indicator symbols, explained in the table below:

Symbol	Name and Description
	XPAND™ Indicator Indicates that your radio has the companding feature activated.
LH	**Power Level Indicator** "**L**" lights when your radio is configured to transmit in Low Power. "**H**" lights when your radio is configured to transmit in High Power.
	Monitor Indicator On indicates carrier squelch. Off indicates signalling squelch.
	Voice Recorder Indicator Indicates that there are stored messages or memos in the voice recorder.

Symbol	Name and Description
	Scan Indicator Indicates that you are scanning. The dot is lit during priority scan mode.
	Keypad Lock Indicator On indicates that the menu keys are locked. Off indicates unlocked.
	Option Board Indicator Indicates that an option board is activated.
	Battery Level Indicator Shows the remaining charge in your battery, based on how many bars are displayed. Flashing, indicates flat battery.
	Missed Call Indicator On indicates call in list. Off indicates no calls in list. Flashing, indicates new call in list.
	Talkaround Indicator Indicates talkaround enabled.
88:88	**Timer** Shows the call time.

Audio Signal Tones

High pitched tone □ Low pitched tone ■

Tone	Signal	Description
Power up OK		Radio self-test OK.
Power up Fail		Radio self-test fail.
Button/ Keypad Error		Button/menu key press not permitted.
Engaged		Channel busy or not permitted to transmit.
Call Failed		Call failed to connect.
Force Monitor		Radio must monitor channel before trans-mission permitted.
Button Feature Enable		Any option button pressed to enable a feature.
Button Feature Disable		Any option button pressed to disable a feature.
Group Call		Radio receives a Group Call.
Individual Call		Radio receives an Individual Call.

Tone	Signal	Description
Call Reminder		Reminder of unanswered call.
TOT Pre-Alert		Warns of expiry of time out timer.
Monitor Alert		Alerts to change of squelch.
Voice Storage		Voice Storage-Recording.
Voice Storage		Voice Storage-Warning.
Voice Storage		Voice Storage-Full.
Scan Start		Radio starts scanning.
Scan Stop		Radio stops scanning.
Priority Call Decode		Radio detects a priority call.
Priority Channel		Radio landed on the priority channel.
Lone Worker		Reminds lone worker to respond.

Tone	Signal	Description
Low Battery		Battery below receive threshold level.
Hardware Error		Hardware error, tone continues until valid operation.
Cancel Message		Previous message or message currently being played from Voice Storage has been deleted.
Channel Free Beep		Indicates current channel is free.
Incoming Emergency Alert		Indicates an emergency situation.
Keypad Acknowledge		Confidence tone when any key pressed or Call ending alert.
Ringtones	English/French/ General	Incoming calls (high tones), outgoing calls (low tones).

GETTING STARTED

BATTERY INFORMATION

Battery Care and Tips

This product is powered by a nickel-cadmium (Ni-Cd), nickel-metal-hydride (NiMH), or lithium-ion rechargeable battery.

The following battery tips will help you obtain the highest performance and longest cycle life from your Motorola rechargeable battery.

- Charge your new battery overnight (**14-16 hrs**) before using it to obtain maximum battery capacity and performance.
- Charging in non-Motorola equipment may lead to battery damage and void the battery warranty.
- When charging a battery that is attached to the radio, turn the radio off to ensure a full charge.
- The battery should be at about 25°C (room temperature) whenever possible. Charging a cold battery (below 10°C) may result in leakage of electrolyte and ultimately, in failure of the battery.
- Charging a hot battery (above 35°C) results in reduced discharge capacity, affecting the performance of the radio. Motorola rapid-rate battery chargers contain a temperature-sensing circuit to ensure that the battery is charged within these temperature limits.
- New batteries can be stored up to two years without significant cycle loss. Store new/unused batteries in a cool dry area.
- Batteries which have been in storage should be charged overnight.
- Do not return fully charged batteries to the charger for an “extra boost”. This action will **significantly** reduce cycle life.
- Do not leave your radio and battery in the charger when not charging. Continuous charging will shorten battery life. (Do not use your charger as a radio stand.)
- For optimum battery life and operation use only Motorola brand chargers. They were designed to operate as an integrated energy system.

Recycling or Disposal of Batteries

At the end of its useful life, the NiCd battery can be recycled. However, recycling facilities may not be available in all areas.

Motorola endorses and encourages the recycling of all re-chargeable batteries. Contact your local Motorola dealer for further information.

Charging the Battery

If a battery is new, or its charge level is very low, you will need to charge the battery before you can use it in your radio.

The icon flashes when the battery is flat and the hardware error tone will sound. This icon will only appear when a genuine Motorola battery is used.

Note: Batteries are shipped uncharged from the factory. New batteries could prematurely indicate full charge, charge a new battery for 14-16 hrs before initial use.

Charger LED	Status
Red	Battery is charging
Green	Battery is fully charged
Flashing Red *	Battery is unchargeable
Flashing Yellow	Charger is getting ready to charge
Flashing Green	Battery is 90% charged

* Battery is damaged. Please contact your dealer.

1. Place the radio with the battery attached, or the battery alone, in the charger.
2. The charger's LED indicates the charging progress.

Battery chargers will charge only the Motorola authorized batteries listed below; other batteries will not charge.

Part No.	Description
HNN9008	High-Capacity NiMH
HNN9009	Ultra-High-Capacity NiMH
HNN9010	Ultra-High-Capacity FM NiMH
HNN9011	High-Capacity FM NiCd
HNN9012	High-Capacity NiCd
HNN9013	Lithium-Ion

FM - Factory Mutual

ACCESSORY INFORMATION

Attaching the Battery

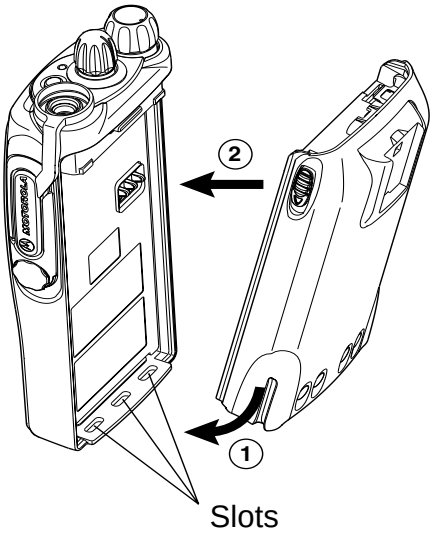

1. Fit the extensions at the bottom of the battery into the slots at the bottom of the radio's body.
2. Press the top part of the battery towards the radio until you hear a click.

Removing the Battery

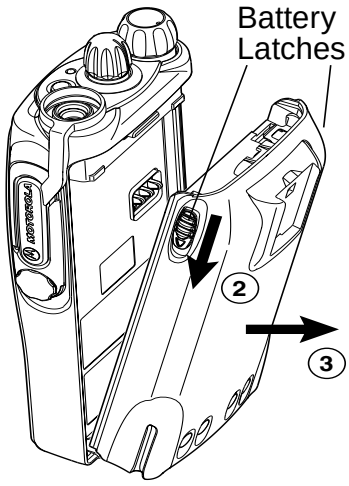

1. Turn off the radio, if it is turned on.
2. Slide the battery latches, on both sides of the battery, downwards.
3. Pull the top part of the battery away from the radio's body, and remove the battery.

Attaching the Antenna

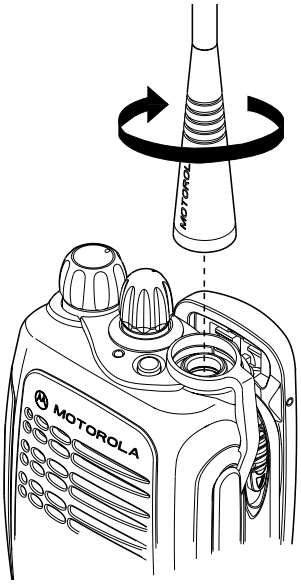

1. Align the threaded end of the antenna with the radio's antenna connector.
2. Turn the antenna clockwise to fasten it.

Removing the Antenna

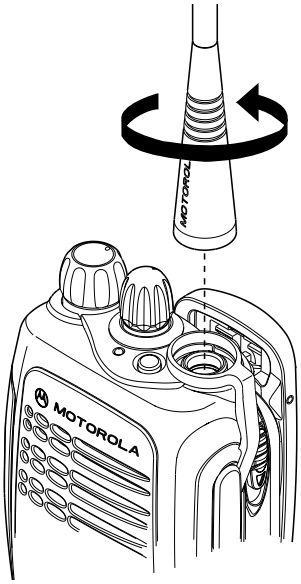

1. Turn the antenna counterclockwise until you can remove it.

Attaching the Belt Clip

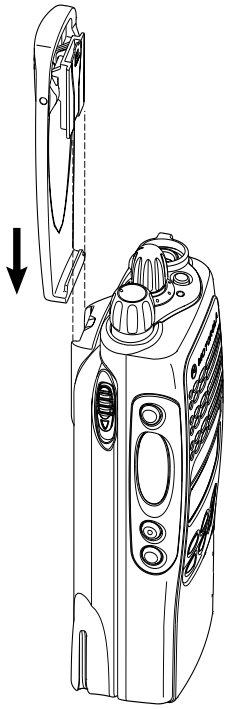

1. Align the grooves of the belt clip with those of the battery.
2. Press the belt clip downwards until a click is heard.

Removing the Belt Clip

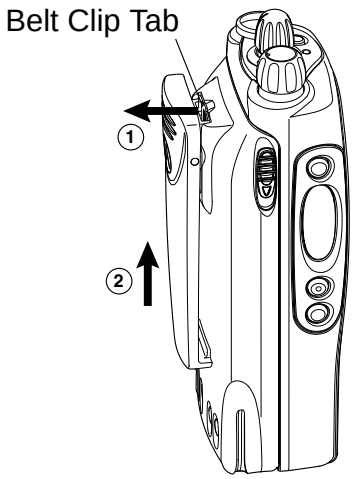

1. Use a key to press the belt clip tab away from the battery.
2. Slide the belt clip upwards to remove it.

RADIO OPERATION

Turning the Radio On or Off

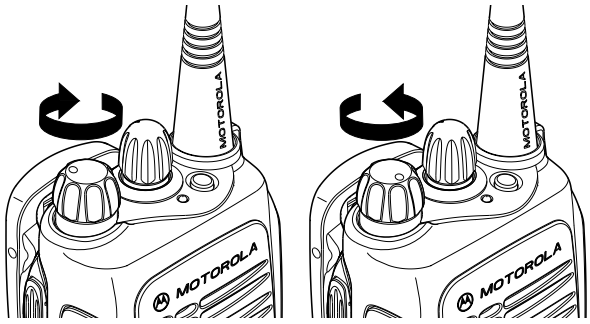

ON **OFF**

- To turn the radio on, turn the **On-Off/Volume Control** knob clockwise.
- To turn the radio off, turn the **On-Off/Volume Control** knob counterclockwise until you hear a click.

Radio On Message

At power up the radio will display a message customised by your dealer, e.g.:

```
Radio On
```

After this text has been displayed, the radio perform a self test routine. On completion of a successful self test the radio will display:

```
Channel Number
```

This may be a number or an alias and will be the channel currently selected by the rotary channel selector. Alternatively, if required the radio may display a message customised by your dealer, e.g.

```
Ready
```

Note: If your radio fails the self test routine consult your dealer.

Adjusting the Radio's Volume

- Turn the **On-Off/Volume Control** knob to adjust the volume level.

Downloaded from www.rads.ru

Selecting a Radio Channel

Your radio offers up to 255 channels, however some may not be programmed. Check with your dealer for more information.

Before selecting a channel ensure your radio is in channel mode.

Note: The rotary knob default is channel mode.

There are two ways to enter channel mode:

Method 1
Press the Channel Mode direct access button, if programmed by your dealer.

Method 2

1 ✔ to enter Menu Mode

2 *or* until: `Channel`

3 ✔ to select

4 Display shows e.g.: `Chan: 05`

Note: After a short period of inactivity the radio returns to the IDLE STATE.

Once in channel mode, there are two ways to select a channel:

Method 1
Turn the rotary knob (1) clockwise or counterclockwise until you reach the desired channel indicated on the display.

Method 2

1 *or* until: `Channel Number` or `Alias`

2 ✔ to confirm your selection.

Display shows: `Selected`
(for 2 seconds)

Sending a Call

1. Select the desired radio channel.
2. Press the **PTT** button and speak clearly into the microphone.
   Your mouth should be 2.5 to 5 cm away from the microphone.
3. When transmitting, the red indicator will light continuously.
4. Release the **PTT** button to listen.

Your radio may be configured for 'Transmit Inhibit' under certain conditions (e.g. when the channel is in use by others) in which case, the channel busy tone will sound when you press the PTT or call button to indicate that transmission is inhibited.

When the channel is free, the Channel Free beep will sound, and you can make a call.

If your radio is equipped with a transmit time out timer (TOT), a warning tone will sound a few seconds before the transmission is cut off. Your radio may be programmed to inhibit retransmission within a preset time.

Receiving a Call

1. Turn your radio on and adjust the volume level.
2. Switch to the desired radio channel.
3. If, at any time, a call is received you will hear the call at the volume level you have set.

Note: The system may have a limited call time and the call may be terminated automatically if this call time is exceeded.

Cancelling a Call

At any time while setting up a call it may be cancelled by pressing the Monitor/Call Cancel button.
The call timer can also cancel a call.

Ending a Call

A call should always be ended by pressing the Monitor/Call Cancel button.

RADIO CALLS

SELECTIVE CALLS

Making a Selective Call

You can make a selective call to a particular radio, known as an individual call, or a group of radios, known as a group call.

You can make calls by using the **Contact List** or the **Missed Calls List**.

Receiving a Selective Call

When you receive a selective call, you will hear either,
an individual call alert tone ,

or a group call alert tone .

The LED Indicator will light (yellow) and the display will show the alias (name) or number (address) of the calling radio e.g.

Display shows: Addr: 234

To answer the call:

1. Press the PTT button or Call button.
2. The call will terminate automatically when the conversation has ended or press the Monitor button.

Your radio has a call timer which shows the time used on an incoming or outgoing selective call
e.g.

Display shows: 01:22

CONTACT LIST

When the radio is in the IDLE state or during a call, the contact list may be used which allows access to up to 255 preprogrammed numbers accessed via the menu.

Depending on the way your radio is programmed, the radio will display either the alpha alias (name) or the number to be dialled.

There are two ways to enter the Contact List:

Method 1
Press the Contact List direct access button, if programmed by your dealer.

Method 2

1. ✔ to enter Menu Mode.
2. *or* until: Contact List
3. ✔ to select.

Once in the Contact List, there are two ways to choose the desired address:

Method 1
Turn the rotary knob (1) clockwise or counter-clockwise until you reach the desired address indicated on the display.

Method 2

or until: Alpha Alias

Number

Once the desired address is displayed, there are two methods to select the address:

Method 1

✔ to confirm your selection.

Display shows: Selected
(for 2 seconds)

Method 2
Press the PTT button *or* Call 1-4 to select address and make the call.
Call 1-4 are pre-programmed call buttons.

Note: During a call you may enter the contact list as described above and make another call to a third party, or initiate a new call. In either case the call may be a voice or status call.

MISSED CALLS

If a call remains unanswered, the call will be stored by the radio, provided that Missed Calls has been programmed into your radio.

Up to ten calls can be stored. If the same radio calls more than once, only the most recent call is stored. When ten calls have been stored by the radio, depending on the radio programming, the eleventh call received may overwrite the first or not be stored by the radio.

When a new call has been stored by the radio, the Missed Call icon will flash and the display will show the alias (name) or number (address) of the calling radio e.g:

234

When the Missed Calls list has been read and any missed calls retained, the Missed Call icon will be illuminated.

The Missed Call List can also be entered directly by pressing the Missed Call button (if programmed) when the radio is in the IDLE STATE or via the menu.

If using the Missed Call button, follow the procedures from step 3 below.

To view the calls in the list via the menu:

1. ✔ to enter Menu Mode.
2. Display shows: Missed Calls
3. ✔ to select.
4. *or* to scroll list: Addr: Alias
5. ✔ to confirm your selection.
6. Display shows: (for 2 seconds) Selected

Note: In the Missed Calls list some alpha alias/ numbers may contain a suffix S, which indicates a status message associated with the call.

Example:

1 Display shows `Reception S`

where S is a status message associated with the call

Displays message e.g. `On Break`

again — Displays status number e.g. `Status 04`

again — Display shows `Reception S`

You can call back to any number in the Missed Call list by:

1 *or* until desired number is displayed: `Addr: Alias`

2 PTT button *or* ✔ to make the call.

3 After the call is set-up, press PTT button and talk with your mouth 2.5-5 cm from micro-phone. Release PTT to listen.

4 The call will terminate automatically when the conversation has ended or press the Monitor/Cancel button.

On a successful call set- up, the entry is automatically deleted from the list together with an associated status message.

Unanswered calls may be deleted from the Missed Call list at any time by :

1. ✔ to enter Menu Mode.
2. Display shows: `Missed Calls`
3. ✔ to select.
4. ⌃ *or* ⌄ to select entry in list: `Addr: Alias`
5. X to request deletion.
6. Display shows: `Delete? ✔/✖`
7. ✔ to confirm deletion.
8. Display shows momentarily, then returns to the Missed Calls list. `Deleted` `Addr: Alias`

On deletion of the last message in the Missed Calls list, the radio will exit the menu and return to the IDLE STATE.

To exit the Missed Call List:

1. X X to exit Missed Calls List.

   Display shows e.g.: `Ready`

Note: The calls in the list are not deleted when the radio is turned off.

STATUS CALLS

A status is a code for transmitting prearranged messages, e.g. status “05” may indicate “Return to Base”. The prearranged messages and associated code digits are contained in a Status List which contains up to 255 entries. This list is used for both incoming calls, when the status of the calling radio is displayed, and outgoing calls, when your status is sent either to a requesting radio or to other radios.

Making a Status Call

When the radio is in the IDLE state or during a call, the status list may be used to select a status message to reply to a calling radio or send your status to another radio.

There are two ways to enter the Status List:

Method 1
Press the Status List direct access button, if programmed by your dealer.

Method 2

1 ✔ to enter Menu Mode.

2 *or* until: Status

3 ✔ to select

Once in the Status List, there are two ways to choose the desired status:

Method 1
Turn the rotary knob (1) clockwise or counter-clockwise until you reach the desired status indicated on the display.

Method 2

or until: Message Alias (e.g On Break)

Number (e.g. 04)

Once the desired status is displayed, there are two methods to select the status:

Method 1

✔ to confirm your selection.

Display shows: Selected
(for 2 seconds)

Method 2
Press the PTT button *or* Call 1-4 to select and make the call. Call 1-4 are pre-programmed call buttons.

Note: During a call you may enter the status list as described above and make another status call to a third party or initiate a new status call.

To send status message to another radio, select radio Alias/ID from Contact List via menu and send as detailed.

Downloaded from www.rads.ru

Receiving a Status Call

Your radio receives a Status Call when:

1. Individual Call alert sounds
2. Display shows: `Stat:On Break` or `Stat:04` alternating with `Alias/Number`

Where Status message “04” / “On Break” is example status message. Note that status number (04) only will be displayed if associated message is not programmed into your radio. Alias/Number is the name or number of the calling radio.

EMERGENCY CALL

Your radio can be programmed to give you a one-button quick access to call a particular radio or centre (predefined by your dealer) in emergency situations. This is the *Emergency Call*.

When you make an Emergency call, your radio goes into an Emergency state, which can be programmed to:

- continually receive speech,
- give no audio feedback; the radio can receive and transmit.

1. Press the **Emergency** button to initiate an Emergency call.
2. Emergency can be stopped by:

- Switching the radio **Off** and **On** again.
- A **reset** message is received by your radio.
- The emergency time duration is reached.

Note: The emergency time duration and reset message are programmed into your radio by your dealer.

You may pre-record a message (for example to confirm your location or status), which is sent automatically when the emergency call is activated. Refer to Voice Storage to use this feature.

Should you receive an Emergency call the incoming emergency alert tone will sound.

FEATURES

VOICE STORAGE

Voice storage allows you to perform various voice related tasks which include voice recorder and an emergency message feature.

Voice Recorder

You can record and playback incoming calls or make a memo using the voice recorder feature, which allows up to 2 minutes of recording.

To **record** an incoming call:

1 ✔ to enter Menu Mode.

2 *or* until: Voice Storage

3 ✔ to select.

4 *or* until: Recorder

5 ✔ to select.

6 Display shows: Del Msg? ✔/ ✖

7 ✔ to delete emergency message pre-recorded in Emergency Message feature.

8 X to remain in Emergency Message Feature.

9 Press and hold the Record/Playback button, the Voice Storage Recording alert sounds momentarily.

10 Record the call or part of the call.

11 The Voice Storage Warning alert sounds when the memory is nearly full.

12 The Voice Storage Full alert sounds when the memory is full and recording ceases.

13 Release the Record/Playback button at any time to stop recording.

14 Subsequent messages can be stored by repeating steps 9 to 13.

To **record** a memo:

1 Ensure radio is in IDLE STATE.

2 ✔ to enter Menu Mode.

3 *or* until: Voice Storage

4 ✔ to select.

5 *or* until: Recorder

6 ✔ to select.

7 Press and hold the Record/Playback button, the Voice Storage Recording alert sounds momentarily.

You will see: Recording

8 Speak clearly into the radio microphone to record your memo.

9 The Voice Storage Warning alert sounds when the memory is nearly full.

You will see: Storage Low

10 The Voice Storage Full alert sounds when the memory is full and recording ceases.

You will see: Storage Full

11 Release the Record/Playback button at any time to stop recording.

12 Subsequent messages can be stored by repeating steps 7 to 11.

To **playback** a recorded call or memo:

1. Ensure radio is in IDLE STATE
2. Press the Record/Playback button to playback the first recorded call or memo.

   You will see: `Playing`

3. Press the Record/Playback button again to skip to the next message to be played back.

To **delete** a recorded call or memo:

1. Playback message as described in above procedure.
2. Press the Cancel button to delete the message currently being played back.

Emergency Message

You can pre-record an emergency message to be sent automatically when the emergency call feature is activated. This message may contain, for example, your location or status which may prove useful to the recipient, especially if, in the emergency situation, you are unable to talk.

To **pre-record** an emergency message:

1 Ensure radio is in IDLE STATE.

2 ✔ to enter Menu Mode.

3 *or* until: Voice Storage

4 ✔ to select.

5 *or* until: Emergency Msg

6 ✔ to select.

7 Display shows: Del Msg? ✔/✖

8 ✔ to delete all messages recorded in Voice Recorder feature.

9 X to remain in Voice Recorder feature.

10 Press and hold the Record/Playback button, the Voice Storage Recording alert sounds momentarily.

You will see: Recording

11 Speak clearly into the radio microphone to record your message.

12 The Voice Storage Warning alert sounds when the memory is nearly full.

You will see: Storage Low

13 The Voice Storage Full alert sounds when the memory is full and recording ceases.

You will see: Storage Full

14 Release the Record/Playback button at any time to stop recording.

15 Press the Record/Playback button to playback the emergency message.

You will see: Playing

16 You can change the message at any time by repeating the above procedure.

UTILITIES

The utilities described below are programmed into your radio by your dealer and are accessible either via a programmable button or via the menu.

SCAN

You can monitor several channels in order to receive any call that is transmitted on any of these channels. Sixteen different channels can be programmed into each scan list. Each channel can share the same scan list or have different scan lists assigned to them.

Once the radio's scan operation is activated and the radio detects a call coming through a channel in its scan list, it switches to that channel for you to receive the call.

STARTING OR STOPPING SCAN

You can start or stop a scan operation by using a pre-programmed **Scan** button or via the menu, either when the radio is in the IDLE STATE or when in a call.

Using the Scan Button

1. Press the **Scan** button to start scanning. The scan start alert tone □ □ □ □ ——— will sound and the display icon lit .
2. Press the **Scan** button again to stop scanning. The scan stop alert tone ■ ■ ■ ■ ——— will sound and the display icon is extinguished.

Using the Menu

1 Ensure radio is in IDLE STATE, or in a call.

2 ✔ to enter Menu Mode.

3 ⌃ *or* ⌄ until: `Utilities`

4 ✔ to select.

5 ⌃ *or* ⌄ until: `Scan`

6 ✔ to select.

Display shows current status e.g. : `Off`

7 ⌃ *or* ⌄ until: `On`

8 ✔ to select.

Display shows: (for 2 seconds) `Selected`

9 Radio exits menu mode and display shows e.g.: `Chan: 05`

The scan start alert tone will sound, the display icon will be lit and the LED indicator will blink green during a scan operation. When a call on a channel is detected the LED will stop blinking and the channel number will be displayed.

PRIORITY CHANNEL

A scan list may contain a priority channel. This means that a particular channel (for example, a commonly used channel) may be checked more frequently than other channels in the list during a scan operation. Priority channels are programmed into your radio scan lists by your dealer, however when a priority channel is included in a scan list, the scan icon changes from to .

TALKBACK

If the programmable Talkback option is set, you can respond to any calls received during the scan operation by pressing the PTT button before the programmed hang-time ends. Check with your dealer for details.

DELETING A NUISANCE CHANNEL

If a channel continually generates unwanted calls/ noise (a “nuisance” channel), you can temporarily remove it from the scan list by performing a *Nuisance Channel Delete* operation:

1. While the radio is on the Nuisance Channel, press and hold the **Nuisance Delete** button until you hear the scan start alert tone.
2. Release the **Nuisance Delete** button.

Note: You cannot perform a Nuisance Channel Delete on a priority channel or if there is only one remaining channel in the scan list.

ADDING A DELETED NUISANCE CHANNEL BACK INTO THE SCAN LIST

Using the Scan Button

1. Press the **Scan** button to stop scanning. The scan stop alert tone will sound.
2. Press the **Scan** button again to re-start scanning. The scan start alert tone will sound, and the scan list will contain all programmed channels.

Using the Menu

1. Follow the instructions for selecting **Scan On/Off** via the menu
2. Select **Scan Off**. Your radio will stop scanning, the scan stop alert tone will sound, the display icon and the LED indicator will be extinguished.
3. Select **Scan On**. Your radio will re-start scanning, the scan start alert tone will sound, the display icon will be lit , the LED indicator will blink green and the scan list will contain all programmed channels.

Downloaded from www.rads.ru

CALL FORWARD

You can call forward calls to your radio to another radio if you are unable to take calls or are away from your radio.

You can switch **On** or **Off** Call Forward by using a pre-programmed **Call Forward** button or via the menu.

Using the Call Forward Button

1. Press the **Call Forward** button to switch **on** Call Forward, when the feature enable alert will sound and the display will show:

Forwarded On

2. Press the **Call Forward** button again to switch **off** Call Forward when the feature disable alert will sound and the display will show:

Forwarded Off

Using the Menu

1 Ensure radio is in IDLE STATE.

2 ✔ to enter Menu Mode.

3 *or* until: Utilities

4 ✔ to select.

5 *or* until: Call forward

6 ✔ to select.

Display shows current status e.g. : Off

7 *or* until: On

8 ✔ to select.

Display shows: (for 2 seconds) Selected

9 Radio exits menu and returns to IDLE STATE

TALKAROUND

In your communications network, you may be using a system to cover a larger area than is possible with your radio. However, you can communicate with another radio within your radio's range without going through the system by using the Talkaround feature. This is especially useful when the system is down.

You can switch **On** or **Off** Talkaround by using a pre-programmed **Talkaround** button or via the menu.

Using the Talkaround Button

1. Press the **Talkaround** button to switch **on** Talkaround when the feature enable alert will sound, the display icon |➔| is lit and the display will show:

`Talkaround On`

2. Press the **Talkaround** button again to switch **off** Talkaround when the feature disable alert will sound, the display icon |➔| is extinguished and the display will show:

`Talkaround Off`

Using the Menu

1 Ensure radio is in IDLE STATE.

2 ✔ to enter Menu Mode.

3 ︿ *or* ﹀ until: `Utilities`

4 ✔ to select.

5 ︿ *or* ﹀ until: `Talkaround`

6 ✔ to select.

Display shows current status e.g. : `Off`

7 ︿ *or* ﹀ until: `On`

8 ✔ to select.

Display shows: (for 2 seconds) `Selected`

9 Radio exits menu mode and display shows e.g.: `Chan: 05`

WHISPER

Whisper allows you to talk quietly into the radio microphone when making a call, by increasing the gain of the radio microphone.

You can switch **On** or **Off** Whisper by using a pre-programmed **Whisper** button or via the menu.

Using the Whisper Button

1. Press the **Whisper** button to switch Whisper **on**, when the feature enable alert will sound and the display will show:

Whisper On

2. Press the **Whisper** button again to switch Whisper **off**, when the feature disable alert will sound and the display will show:

Whisper Off

Using the Menu

1 Ensure radio is in IDLE STATE.

2 ✔ to enter Menu Mode.

3 *or* until: Utilities

4 ✔ to select.

5 *or* until: Whisper

6 ✔ to select.

Display shows current status e.g. : Off

7 *or* until: On

8 ✔ to select.

Display shows: (for 2 seconds) Selected

9 Radio exits menu mode and display shows e.g.: Chan: 05

LONE WORKER

The Lone Worker feature enables you to work alone with added safety.

You can switch **On** or **Off** Lone Worker by using a pre-programmed **Lone Worker** button or via the menu.

Using the Lone Worker Button

1. Press the **Lone Worker** button to switch Lone Worker **on**, when the feature enable alert will sound and the display will show:

Lone Wkr On

- You will be reminded at intervals that **Lone Worker** is switched **on** by a high pitched alert tone (Lone Worker Reminder) being sounded.
- Press **any button** to respond and cancel the alert, if you do **not** the radio will enter the Emergency state.

2. Press the **Lone Worker** button again to switch Lone Worker **off**, when the feature disable alert will sound and the display will show:

Lone Wkr Off

3. You may also switch off Lone Worker by changing the channel or switching radio **off** and **on** again.

Using the Menu

1 Ensure radio is in IDLE STATE.

2 ✔ to enter Menu Mode.

3 *or* until: Utilities

4 ✔ to select.

5 *or* until: Lone Worker

6 ✔ to select.

Display shows current status e.g. : Off

7 *or* until: On

8 ✔ to select.

Display shows: (for 2 seconds) Selected

9 Radio exits menu mode and display shows e.g.: Chan: 05

POWER LEVEL

You can transmit your calls at different transmit power levels. A higher level means you can reach a radio that is farther away. A lower power level conserves battery power. Use the high power setting only when necessary, to conserve battery life.

You can switch between **high** and **low** power levels by using a pre-programmed **Power Level** button or via the menu.

Using the Power Level Button

1. Press the **Power Level** button to switch to **high power** when the feature enable alert will sound, the display icon **H** is lit and the display will show:

High Power

2. Press the **Power Level** button again to switch to **low power** when the feature disable alert will sound, the display icon **L** is lit and the display will show:

Low Power

Using the Menu

1 Ensure radio is in IDLE STATE.

2 ✔ to enter Menu Mode.

3 *or* until: Utilities

4 ✔ to select.

5 *or* until: Power Level

6 ✔ to select.

Display shows current status e.g. : Low

7 *or* until: High

8 ✔ to select.

Display shows: (for 2 seconds) Selected

9 Radio exits menu mode and display shows e.g.: Chan: 05

COMPANDING

Companding is a collective term to define **comp**ressing the audio signal on transmission and exp**anding** the audio signal on reception. The overall effect is to reduce noise in the received signal, giving you crisper, clearer audio clarity. Companding should only be used when other radios in your system have the same companding feature available.

You can switch **On** or **Off** Companding by using a pre-programmed **Companding** button or via the menu.

Using the Companding Button

1. Press the **Companding** button to switch Companding **on**, when the feature enable alert will sound, the display icon is lit and the display will show:

Companding On

2. Press the **Companding** button again to switch Companding **off**, when the feature disable alert will sound, the display icon extinguished and the display willshow:

Companding Off

Using the Menu

1 Ensure radio is in IDLE STATE.

2 ✔ to enter Menu Mode.

3 *or* until: Utilities

4 ✔ to select.

5 *or* until: Companding

6 ✔ to select.

Display shows current status e.g. : Off

7 *or* until: On

8 ✔ to select.

Display shows: (for 2 seconds) Selected

9 Radio exits menu mode and display shows e.g.: Chan: 05

BACKLIGHT

Backlight illuminates the radio display and menu navigation keys.

Your radio can be programmed to have the backlight permanently on, permanently off or a timed period, when any new information being displayed, causes the backlight to remain on for 10 seconds.

You can switch **On** or **Off** the Backlight by using a pre-programmed **Backlight** button or via the menu.

Using the Backlight Button

1. Press the **Backlight** button to switch Backlight **on**, when the feature enable alert will sound and the display will show:

`Backlight Tmd` *or* `Backlight On`

2. Press the **Backlight** button again to switch Backlight **off**, when the feature disable alert will sound and the display will show:

`Backlight Off`

Using the Menu

1 Ensure radio is in IDLE STATE.

2 ✔ to enter Menu Mode.

3 ︿ *or* ﹀ until: `Utilities`

4 ✔ to select.

5 ︿ *or* ﹀ until: `Backlight`

6 ✔ to select.

Display shows current status e.g. : `Off`

7 ︿ *or* ﹀ until: `On` or `Timed`

8 ✔ to select e.g.: `Timed`

Display shows: (for 2 seconds) `Selected`

9 Radio exits menu mode and display shows e.g.: `Chan: 05`

OPTION BOARD

Your radio is capable of being fitted with an option board. Each board will extend the capability of your radio by adding a new feature such as voice storage, voice scrambler or trunking. See your dealer for the availability and suitability of the various option boards.

You can switch **On** or **Off** the Option Board by using a pre-programmed **Option Board** button or via the menu.

Using the Option Board Button

1. Press the **Option Board** button to switch the Option Board **on**, when the feature enable alert will sound, the option board icon is lit and the display will show:

Option Brd On

2. Press the **Option Board** button again to switch the Option Board **off**, when the feature disable alert will sound, the option board icon extinguished and the display will show:

Option Brd Off

Using the Menu

1 Ensure radio is in IDLE STATE.

2 ✔ to enter Menu Mode.

3 *or* until: Utilities

4 ✔ to select.

5 *or* until: Option Board

6 ✔ to select.

Display shows current status e.g. : Off

7 *or* until: On

8 ✔ to select.

Display shows: (for 2 seconds) Selected

9 Radio exits menu mode and display shows e.g.: Chan: 05

VOICE OPERATED TRANSMIT (VOX)

When the VOX headset/microphone is connected, your radio may be used with hands-free operation.

The VOX feature intelligently senses background noise, so that it adapts automatically to the noise level in the environment in which you are working.

To start the VOX feature:

1. Connect the VOX headset onto the accessory connector of the radio.
2. Switch **On** the radio.

You can disable the VOX feature by pressing the PTT button on the radio. This allows you to use the VOX headset but you must press the radio PTT to transmit.

To re-enable the VOX feature:

1. Switch the radio **Off** and **On** again with the headset connected to the accessory connector
   or,
2. Change channel with the VOX headset connected.

STUN/UNSTUN

For added security and to avoid abuse of the radio system in which you operate, a feature known as **Stun/Unstun** is included in your radio.

This feature can only be activated by your system manager or administrator.

For example, if your radio is stolen and is being used illegally, your system administrator can send a signal which will **stun** the radio making it incapable of being used. This feature is also useful if the system is being abused by a user who is not complying with the correct communications protocol.

The radio can only be unstunned, i.e. returned to operational use, by an **unstun** signal sent from the system administrator or returning the radio for reprogramming.

Downloaded from www.rads.ru

RADIO INFORMATION

To enable you and your dealer/system administrator to establish, quickly, the software and radio parameters programmed into your radio, a feature known as **Radio Information** can be accessed via the menu.

On selection of **Radio Information**, your radio display will indicate:

- Software (SW) version
- Codeplug (CP) version
- Software (SW) part number
- Codeplug (CP) part number

To access Radio Information

1	Ensure radio is in IDLE STATE.	
2	✔ to enter Menu Mode.	
3	⌃ *or* ⌄ until:	Radio Info
4	✔ to select.	
5	⌃ *or* ⌄ until:	SW Version or CP Version or SW Part no or CP Part no
6	✔ to select e.g. :	SW Version
	Display shows e.g. :	D02.00.01
7	✕ to select:	SW Version

8 *or* for further selections following steps 6 and 7:

SW Version
or
CP Version
or
SW Part no
or
CP Part no

9 (X) (X) to exit menu mode , display shows e.g.:

Chan: 05

SAFETY INFORMATION

Safe and Efficient Operation of Motorola Two-Way Radios

This section provides information and instructions for the safe and efficient operation of Motorola Portable and Mobile Two-Way Radios.

For information regarding radio use in hazardous areas, please refer to the Factory Mutual (FM) approval manual supplement or Instruction Card which is included with radio models that offer this capability.

Exposure To Radio Frequency Energy

National and International Standards and Guidelines

Your Motorola Two-Way Radio, which generates and radiates radio frequency (RF) electromagnetic energy (EME) is designed to comply with the following National and International Standards and Guidelines regarding exposure of human beings to radio frequency electromagnetic energy:

- Federal Communications Commission Report and Order No. FCC 96-326 (August 1996)
- American National Standards Institute (C95.1 - 1992)
- National Council on Radiation Protection and Measurements (NCRP - 1986)
- International Commission on Non-Ionizing Radiation Protection (ICNRP - 1986)
- European Committee for Electrotechnical Standardisation (CENELEC):
  - ENV. 50166-1 1995 E — Human Exposure to Electromagnetic Fields Low Frequency (0Hz to 10kHz)
  - ENV. 50166-2 1995 E — Human Exposure to Electromagnetic Fields High Frequency (10kHz to 300GHz)
  - Proceedings of SC211/8 1996 — Safety Considerations for Human Exposure to E.M.F.s from Mobile Telecommunications Equipment (M.T.E.) in the Frequency Range 30MHz - 6 GHz (E.M.F. - Electromagnetic Fields)

To assure optimal radio performance and that human exposure to radio frequency electromagnetic energy is within the guidelines set forth in the above standards, always adhere to the following procedures:

Portable Radio Operation and EME Exposure

When transmitting with a portable radio, hold the radio in a vertical position with its microphone 2.5 to 5 centimeters (1 to 2 inches) away from your mouth. Keep antenna at least 2.5 centimeters (1 inch) from your head and body.

If you wear a portable two-way radio on your body, ensure that the antenna is at least 2.5 centimeters (1 inch) from your body when transmitting.

Electromagnetic Interference/Compatibility

Note: Nearly every electronic device is susceptible to electromagnetic interference (EMI) if inadequately shielded, designed or otherwise configured for electromagnetic compatibility.

To avoid electromagnetic interference and/or compatibility conflicts, turn off your radio in any facility where posted notices instruct you to do so. Hospitals or health care facilities may be using equipment that is sensitive to external RF energy.

When instructed to do so, turn off your radio when on board an aircraft. Any use of a radio must be in accordance with airline regulations or crew instructions.

Operational Warnings

WARNING

Vehicles With an Air Bag

Do not place a portable radio in the area over an air bag or in the air bag deployment area. Air bags inflate with great force. If a portable radio is placed in the air bag deployment area and the air bag inflates, the radio may be propelled with great force and cause serious injury to occupants of the vehicle.

Potentially Explosive Atmospheres

Turn off your two-way radio when you are in any area with a potentially explosive atmosphere, unless it is a radio type especially qualified for use in such areas (for example, Factory Mutual or CENELEC Approved). Sparks in a potentially explosive atmosphere can cause an explosion or fire resulting in bodily injury or even death.

Batteries

Do not replace or recharge batteries in a potentially explosive atmosphere. Contact sparking may occur while installing or removing batteries and cause an explosion.

Blasting Caps and Areas

To avoid possible interference with blasting operations, turn off your radio when you are near electrical blasting caps, in a blasting area, or in areas posted: “Turn off two-way radio.” Obey all signs and instructions.

Note:
The areas with potentially explosive atmospheres referred to above include fueling areas such as: below decks on boats; fuel or chemical transfer or storage facilities; areas where the air contains chemicals or particles, such as grain, dust or metal powders; and any other area where you would normally be advised to turn off your vehicle engine. Areas with potentially explosive atmospheres are often but not always posted.

Operational Cautions

Caution

Damaged Antennas

Do not use any portable two-way radio that has a damaged antenna. If a damaged antenna comes into contact with your skin, a minor burn can result.

Batteries

All batteries can cause property damage and/or bodily injury such as burns if a conductive material such as jewellery, keys, or beaded chains touch exposed terminals. The conductive material may complete an electrical circuit (short circuit) and become quite hot. Exercise care in handling any charged battery, particularly when placing it inside a pocket, purse, or other container with metal objects.

General Radio Care

Caution

- The use of chemicals such as detergents, alcohol, aerosol sprays, and/or petroleum products may be harmful to and damage the radio housing.
- Avoid physical abuse of the radio such as carrying it by the antenna.
- The accessory connector (if fitted) has a protective cap which should be left in place when the connector is not in use.
- Clean the radio exterior using a cloth moistened with clean water and a mild dishwashing liquid.
- The use of non-approved radio accessories may damage the radio and invalidate warranty.

NOTES

Downloaded from www.rads.ru